REVISIONS				
ZONE	REV	DESCRIPTION	DATE	APPROVED
	A	P/N WS 62443	01N□V01	

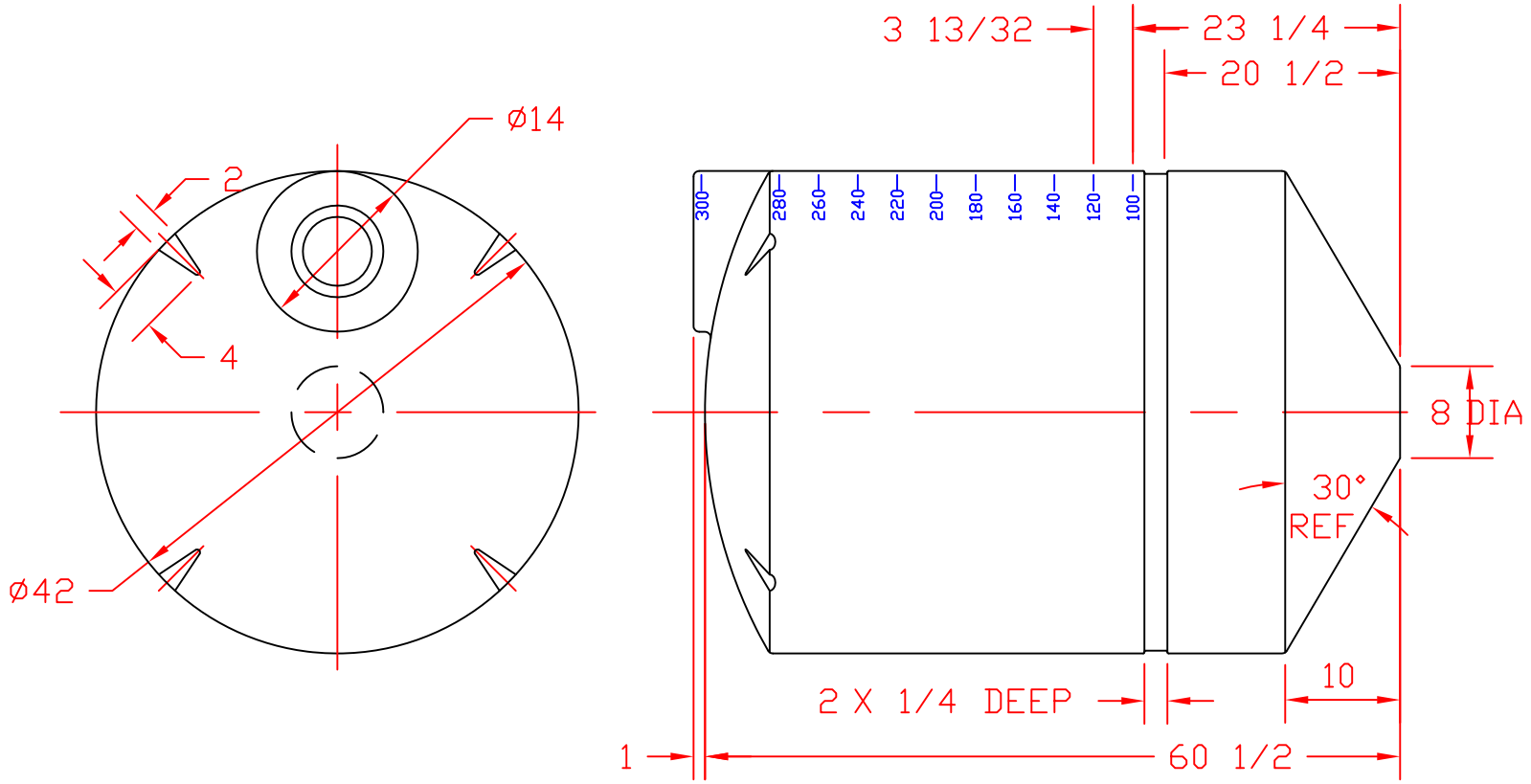

NORWESCO
ST. BONIFACIUS, MN

310 GALLON CONE BOTTOM TANK

JTP 30JUN99	SIZE A	FSCM NO.	DWG NO.	REV A
	SCALE 1/16		SHEET	